metabo HPT

EKECTRIC TOOL PARTS LIST

■ CORDLESS DRIVER DRILL 2017 • 01 • 30
Model DB 3DL2 (E1a)

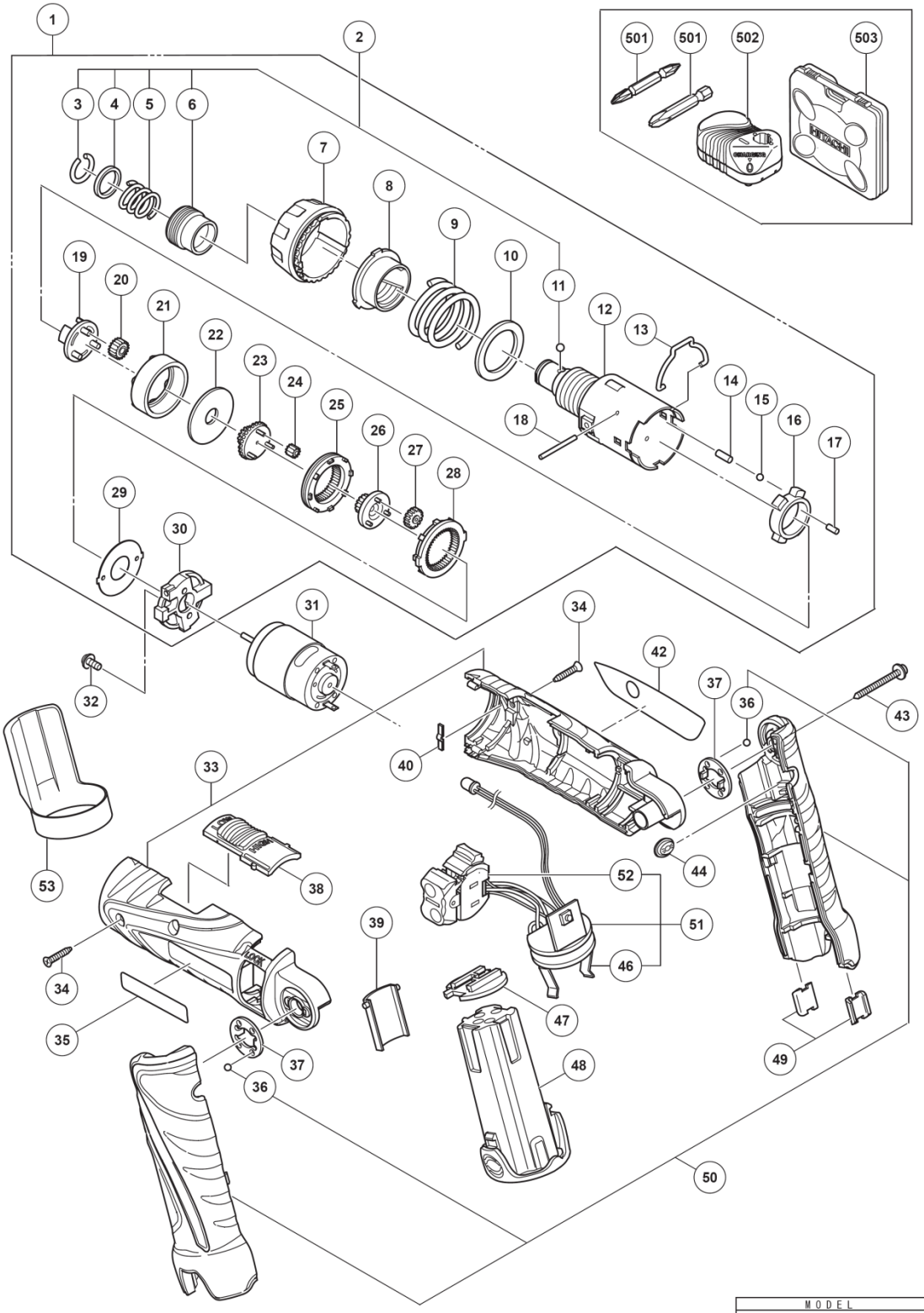

Rev.4

ITEM NO.	CODE NO.	DESCRIPTION	NO. USED	REMARKS
1	332759	GEAR BOX ASS'Y	1	INCLUD.3-30
2	320085	GUIDE SLEEVE SET	1	INCLUD.3-6.11
3	315984	RETAINING RING	1	
4	315983	WASHER (D)	1	
5	320409	GUIDE SPRING	1	
6	319921	GUIDE SLEEVE (A)	1	
7	332762	CLUTCH DIAL	1	
8	326341	NUT	1	
9	326340	SPRING	1	
10	326339	WASHER (D)	1	
11	319535	STEEL BALL D3.5 (10 PCS.)	1	
12	332761	GEAR CASE	1	
13	326345	SHIFT ARM	1	
14	326338	PIN SET (3 PCS.)	3	
15	317788	STEEL BALL D3	3	
16	326323	LOCK RING	1	
17	326324	NEEDLE ROLLER SET (6PCS.)	6	
18	326329	NEEDLE	2	
19	326325	CARRIER	1	
20	326327	PLANET GEAR (C) SET (3 PCS.)	3	
21	326326	RING GEAR	1	
22	326328	WASHER (B)	2	
23	332768	PINION (C)	1	
24	332766	PLANET GEAR (B) SET (3 PCS.)	3	
25	332767	SLIDE RING GEAR	1	
26	332765	PINION (B)	1	
27	326335	PLANET GEAR (A) SET (3 PCS.)	3	
28	326334	FIRST RING GEAR	1	
29	332764	WASHER (A)	1	
30	332763	MOTOR SPACER	1	
31	332755	MOTOR DC 3.6V	1	
32	330755	MACHINE SCREW (W/SP. WASHER) M2.6X6	2	
33	332754	HOUSING (A).(B) SET	1	
34	984319	PAN HD. TAPPING SCREW D3X8	4	
35		HITACHI LABEL	1	
36	317788	STEEL BALL D3	4	
37	326315	CLICK PLATE	2	
38	332757	SHIFT KNOB	1	
39	332975	HANDLE COVER	1	
40	326309	CLICK SPRING	1	
42		NAME PLATE	1	
43	302086	TAPPING SCREW (W/FLANGE) D4X20 (BLACK)	1	
44	332756	BUTTON	1	
46	332771	TERMINAL	2	
47	326316	TERMINAL SUPPORT	1	
48	326263	BATTERY EBM 315	2	
49	326318	CLIP	2	
50	332752	HANDLE (A).(B) SET (GREEN)	1	
51	333316	WIRING	1	INCLUD.46 & 52
52		SWITCH	1	INCLUDED IN ITEM 51
53	370144	RUBBER COVER		

STANDARD ACCESSORIES

DB3DL2

ITEM NO.	CODE NO.	DESCRIPTION	NO. USED	REMARKS
501	992671	+ DRIVER BIT (B) NO.2 50L	1	
502	UC3SFL	CHARGER (MODEL UC 3SFL)	1	
503	332844	CASE	1	

OPTIONAL ACCESSORIES

ITEM NO.	CODE NO.	DESCRIPTION	NO. USED	REMARKS
601	326665	HOLSTER	1	
602	992670	+ DRIVER BIT (B) NO.1 50L	1	
603	992672	+ DRIVER BIT (B) NO.3 50L	1	
604	955658	- DRIVER BIT (B) 4MMX50	1	
606	728370B5	- DRIVER BIT (B) 6MMX50	1	
607	321823	DRILL CHUCK AND ADAPTER SET	1	INCLUD.608.609
608	307543	CHUCK ADAPTER	1	
609	987575	CHUCK WRENCH FOR 10VLB-D.10VLR-D	1	